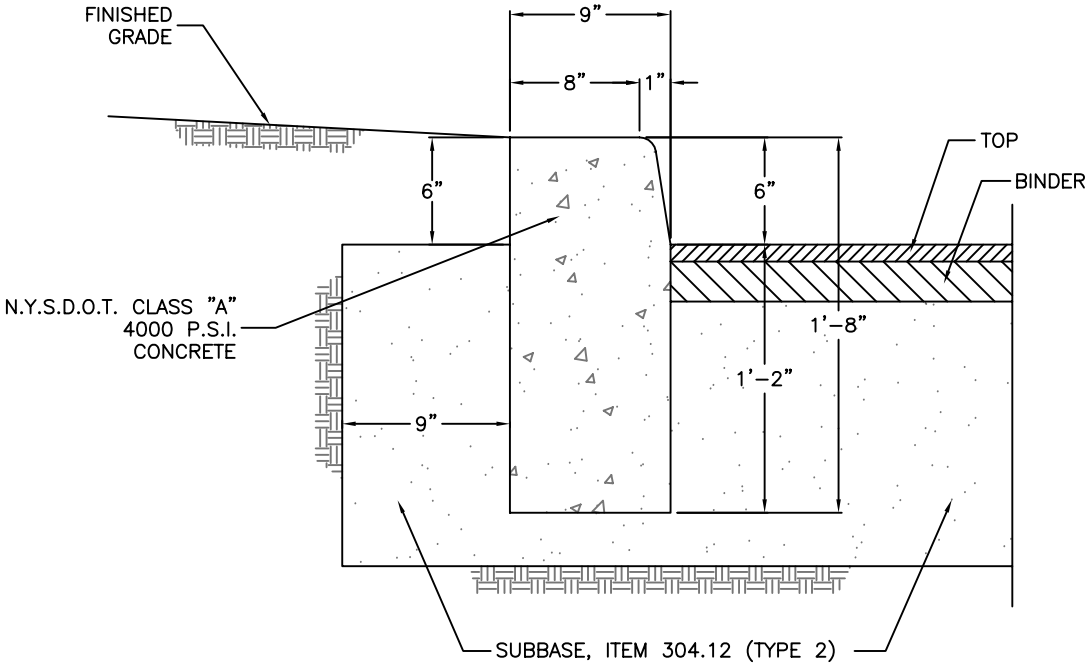

NOTES:

1. CONTRACTION JOINTS TO BE AT 10 FOOT INTERVALS AND SHALL BE FOMED OR SAW CUT TO A DEPTH OF 1/2 INCH BELOW THE SURFACE OF THE CURB.
2. EXPANSION JOINTS TO BE AT 100 FOOT INTERVALS AND SHALL BE FORMED WITH 3/4 INCH WIDE PREMOLDED BITUMINOUS JOINT FILLER. THE FILLER MATERIAL SHALL BE CUT TO CONFORM TO THE CROSS SECTION OF THE CURB.
3. EXPANSION JOINTS AND FORMED CONTRACTION JOINTS ARE TO BE EDGED WITH CONCRETE FINISHING TOOLS.
4. CONCRETE SEALING AGENT SHALL BE APPLIED THE SAME DAY THAT CURBS ARE CONSTRUCTED.
5. CURB SHALL BE N.Y.S.D.O.T. TYPE BB OR EQUIVALENT.

TOWN OF HENRIETTA

CONCRETE CURB

SCALE: N.T.S.

DATE: 03/14/2012

RD-08

\\Oserver\user folders\Town Projects\AutoCAD Projects\Non-Town Wide\Details\Sanitary\(RD-08)ConcreteCurb.dwg